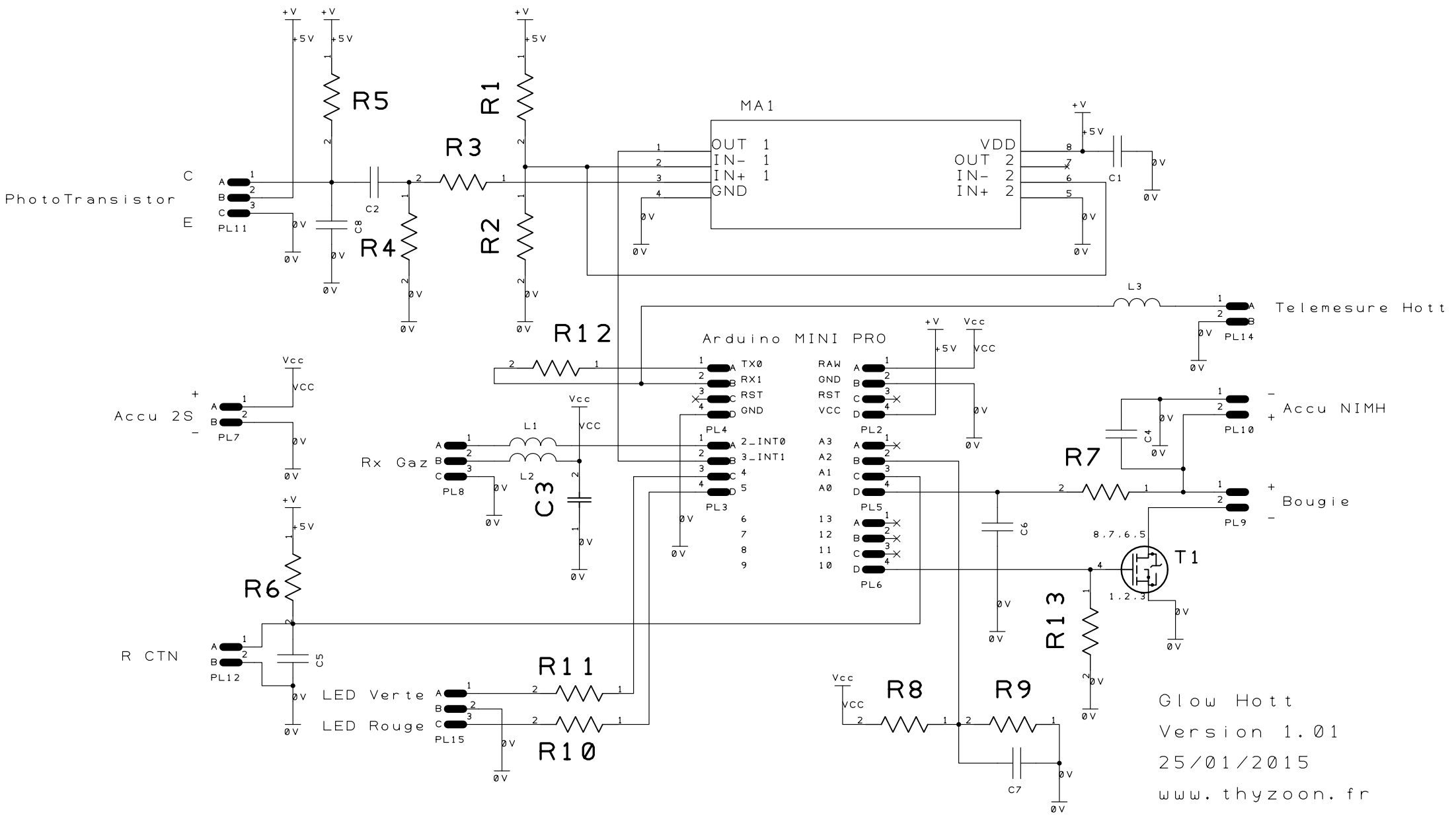
PhotoTransistor
C
E
PL11
R5
R4
C8
C2
R3
R1
R2
MA1
OUT 1
IN- 1
IN+ 1
GND
VDD
OUT 2
IN- 2
IN+ 2
C1
L3
Telemesure Hott
PL14
R12
Arduino MINI PRO
TX0
RX1
RST
GND
PL4
2_INT0
3_INT1
PL3
RAW
GND
RST
VCC
PL2
A3
A2
A1
A0
PL5
PL6
Accu 2S
PL7
Rx Gaz
PL8
L1
L2
C3
Accu NIMH
PL10
C4
R7
Bougie
PL9
C6
T1
R13
R6
R CTN
PL12
C5
R11
LED Verte
LED Rouge
PL15
R10
R8
R9
C7
Glow Hott
Version 1.01
25/01/2015
www.thyzoon.fr